10/100 BASE-T SINGLE PORT MAGNETICS MODULE
P/N: H12T01D DATA SHEET

Feature

- Compliant with IEEE 802.3 standard.
- Comply with ROHS requirements.
- Operating temperature range: 0℃ to +70℃.
- Storage temperature range: -25℃ to +105℃.

Electrical Specifications @ 25℃

OCL:	350uH Min. @100KHz/0.1V with 8mA DC Bias				
Hi-POT :	1500Vrms				
Turn Ratio:	1:1±3%				
LK:	0.5uH Max @100KHz/0.2V				
Cw/w	65PF Max @100KHz/0.2V				
D.C.R:	1.2 ohm Max				
Insertion Loss:	1-100MHz: -1.0dB Max				
Cross Talk :	1-100MHz: -30dB Min				
Return Loss:	1-30MHz	40MHz	50MHz	60-80MHZ	80-100MHZ
	-18dB Min	-14.4dB Min	-13.1dB Min	-12dB Min	-10dB Min

Schematic

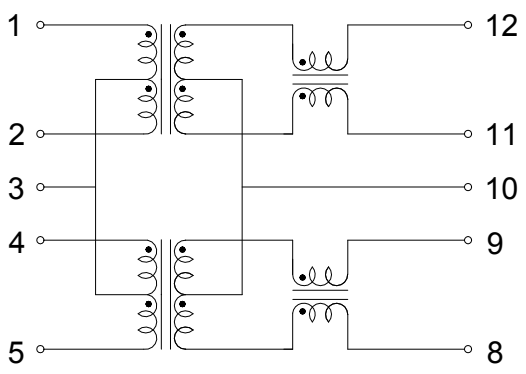

Mechanical

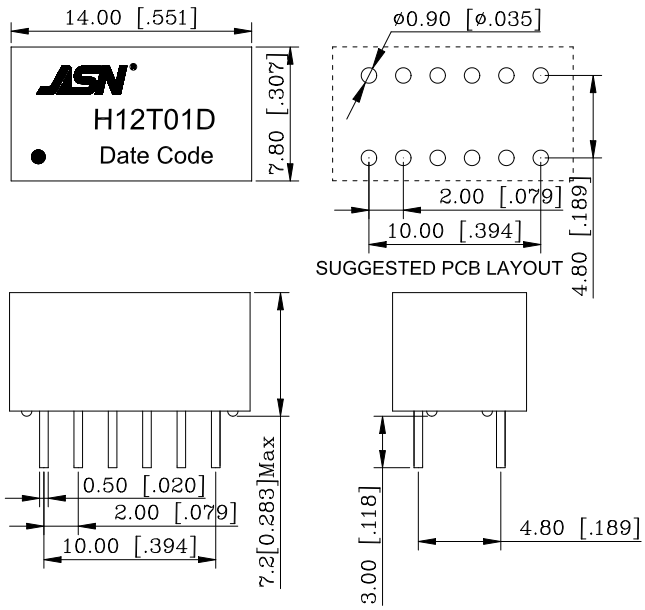

Unless otherwise specified, all tolerances are ±0.25